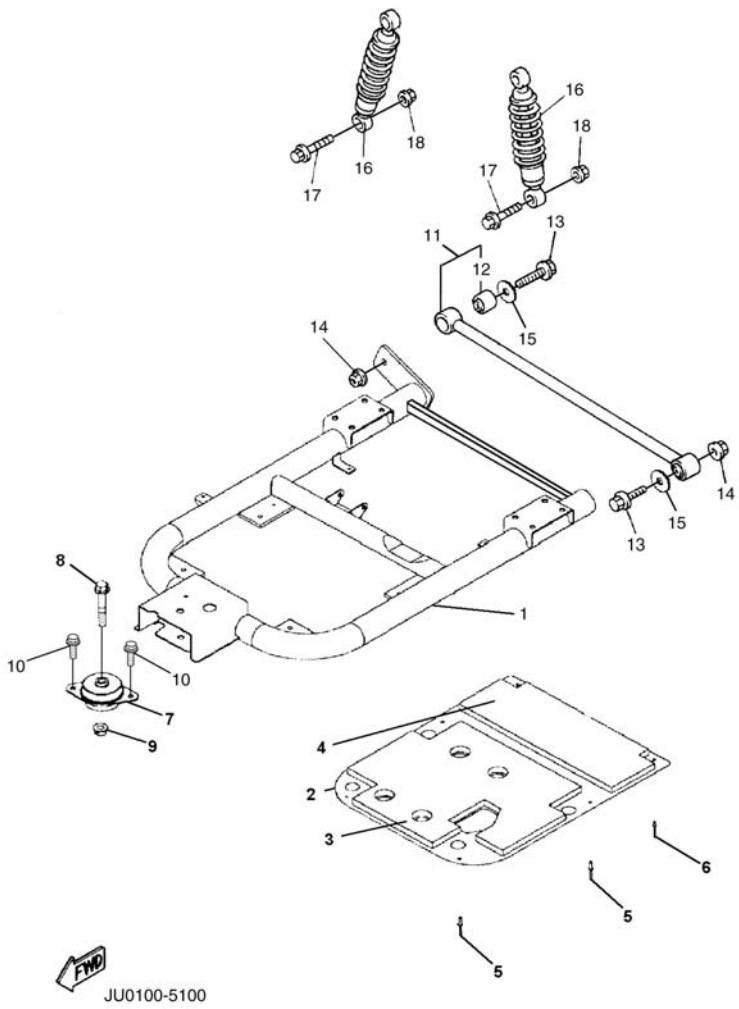

FIG. 11 REAR ARM / SUSPENSION

REF NO.	PART NUMBER	DESCRIPTION	QTY	REMARKS
1	JU0-F2110-00-00	REAR ARM COMP.	1	
2	JN6-F2128-01-00	COVER, 1	1	
3	JN6-F211E-01-00	PANEL, INNER 1	1	
4	JN6-F211G-01-00	PANEL, INNER 2	1	
5	90267-48850-00	RIVET, BLIND	4	
6	90267-40851-00	RIVET, BLIND	2	
7	JN6-F2123-01-00	BUSHING, 1	1	
8	90105-13864-00	BOLT, FLANGE	1	
9	90179-13878-00	NUT	1	
10	9751P-10620-00	BOLT, HEX. W/WASHER	2	
11	JN6-F217G-00-00	ROD, CONNECTING	1	
12	JN6-F2124-00-00	.BUSHING, 2	2	
13	95817-12065-00	BOLT, FLANGE	2	
14	95617-12200-00	NUT, U-FLANGE	2	
15	90201-12426-00	WASHER, PLAIN	2	
16	JN4-F2210-00-00	SHOCK ABSORBER	2	
17	95817-10055-00	BOLT, FLANGE	4	
18	95607-10200-00	NUT, U-FLANGE	4	